MODEL: PC6040B1B* L/R

BARRIER FREE

*ALL ACCESSORIES OPTIONAL

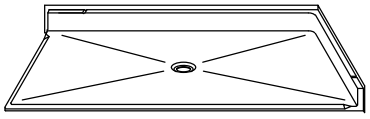

PERSPECTIVE VIEW - N.T.S.
MODEL SHOWN HERE AS:
RIGHT HAND

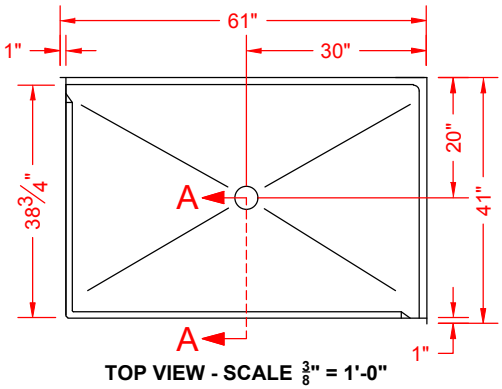

TOP VIEW - SCALE 3/8" = 1'-0"

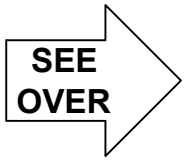

Features:

-Molded, one-piece gelcoat/fiberglass corner shower pan
-Available in various threshold heights
-On all threshold, heights 1-1/4" or shorter, no mud set is required, an epoxy adhesive kit is supplied
-On all threshold, heights 1-1/2" or taller, no mud set is required

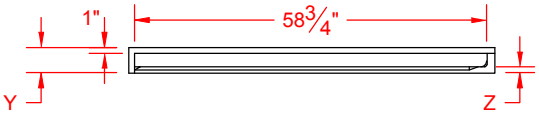

FRONT ELEVATION - SCALE: 3/8" = 1'-0"

***OTHER THRESHOLD HEIGHTS AVAILABLE UPON REQUEST**

MODEL #	UNIT HEIGHT Y	THRESHOLD HEIGHT Z*
PC6040B1B	4-3/4"	3/4" MIN
PC6040B2B	6"	2" MAX

*** - SEE BACK FOR DETAIL SECTIONS**

PRODUCT SPECIFICATIONS:

-Single-piece corner shower pan shall be constructed of gelcoat/fiberglass
-Rough-In: Stud opening +1/4" -0" Nominal Dimensions.

C.S.I. FORMAT SPECIFICATION TEXT AVAILABLE

PRODUCT INFORMATION:

-Colors: White as standard, others to match any major fixture manufacturer, also available with sprayable solid surface in many colors

OPTIONAL ACCESSORIES:

INSTALLED BY OTHERS:
-T-shaped rubber WaterStopper kit
-Semi-permanent threshold adapter
-No-caulk brass drain

CODES:

Designed and manufactured in compliance with the following standards and codes:
-A.N.S.I. Z124.2 Standards for Plastic Showers
-I.P.C. International Plumbing Code
-U.P.C. Uniform Plumbing Code

NOTICE OF LIMITATION:

bestbath® Intelligent Designs

We reserve the right to make revisions without notice in the design of fixtures or in packaging unless this right has specifically been waived at the time the order is accepted.

PC6040B1B L/R

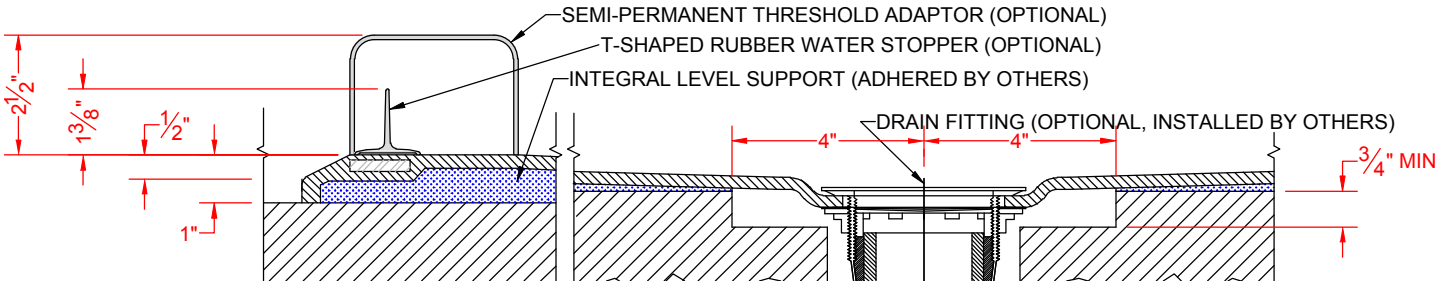

SECTION A-A - SCALE: 3" = 1'-0"

PC6040B2B L/R

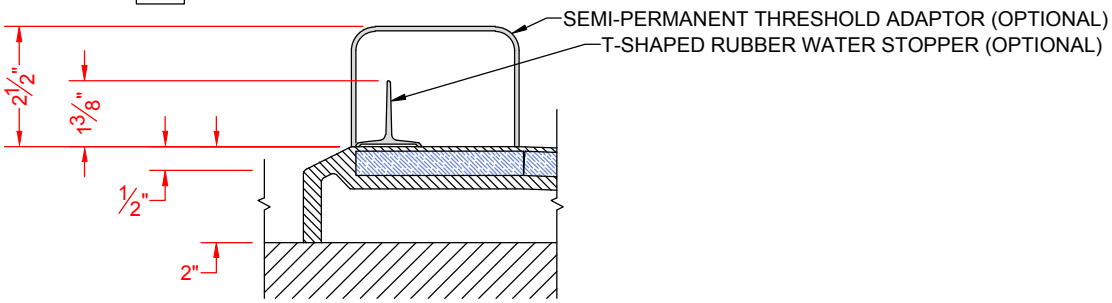

SECTION A-A - SCALE: 3" = 1'-0"

****OTHER THRESHOLD HEIGHTS AVAILABLE UPON REQUEST****

bestbath Intelligent Designs